Type 2 AC surge protector - Single-phase

DS42S-280



- **Discover our latest innovation : the DAC50S-20-320**
- Type 2 AC Multipolar surge protector
- In: 20 kA
- Imax total: 80 kA
- Pluggable module for each phase
- Remote signaling
- EN 61643-11, IEC 61643-11, UL1449 ed.5

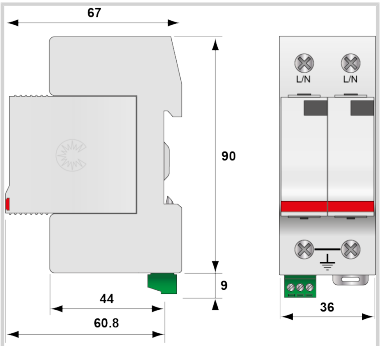

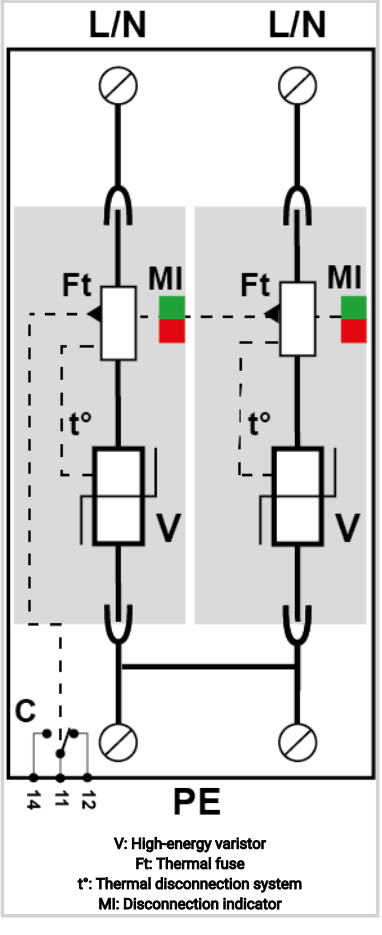

V: High-energy varistor
Ft: Thermal fuse
t°: Thermal disconnection system
MI: Disconnection indicator

Electrical Characteristics		
SPD type	IEC	2
Network		230/400V
AC system		TN
Nominal line voltage	Un	230 Vac
Max. AC operating voltage	Uc	280 Vac
Temporary Over Voltage (TOV) Characteristics - 5 sec. *Without disconnection*	UT	335 Vac withstand
Temporary Over Voltage (TOV) Characteristics - 120 mn *Without disconnection or with safety disconnection*	UT	440 Vac disconnection
Residual Current *Leakage current to Ground*	Ipe	< 1 mA
Follow current	If	None
Nominal discharge current *15 x 8/20 µs impulses*	In	20 kA
Max. discharge current *max. withstand @ 8/20 µs by pole*	Imax	40 kA
Total Maximum discharge current *max. total withstand @ 8/20 µs*	Imax Total	80 kA
Connection mode(s)		L/PE and N/PE
Protection mode(s)		Common mode
Protection level L/PE *@ In (8/20µs)*	Up L/PE	1.3 kV
Admissible short-circuit current	Isccr	25 000 A
Mechanical Characteristics		
Technology		MOV
SPD configuration		Single phase
Connection to Network		By screw terminals: 2.5-25mm² / by bus
Format		Plug-in modular box
Mounting		Symmetrical rail 35 mm (EN 60715)
Housing material		Thermoplastic UL94 V-0
Operating temperature	Tu	-40/+85°C
Protection rating		IP20
Failsafe mode		Disconnection from AC network
Disconnection indicator		1 mechanical indicator by pole
Spare module(s)		DSM40-280
Remote signaling of disconnection		output on changeover contact
Dimensions		See diagram
Weight		0.19 kg
Disconnectors		
Thermal disconnector		Internal
Installation ground fault breaker		Type 'S' or delayed
Back-up protection device		Fuses type gG - 50 A
Standards		
Standards compliance		IEC 61643-11 / EN 61643-11 / UL1449 ed.5
Certification		UL Recognized / TUV
Environmental standards		EU RoHS
Part number		
461121		