Type 2 AC surge protector - 1-pole - pluggable

DS41S-440

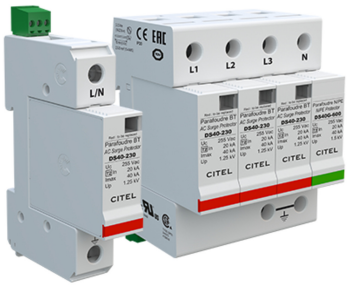

- **Discover our latest innovation : the DAC50S-10-440**
- Type 2 AC Multipolar surge protector
- In: 20 kA
- Imax total: 40 kA
- Pluggable module for each phase
- Remote signaling
- EN 61643-11, IEC 61643-11, UL1449 ed.5 compliance

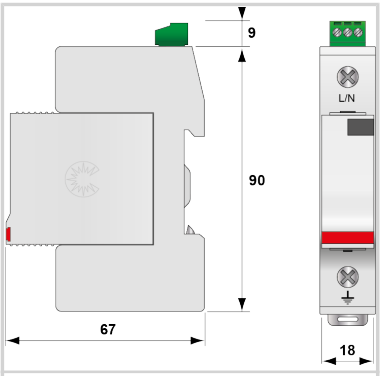

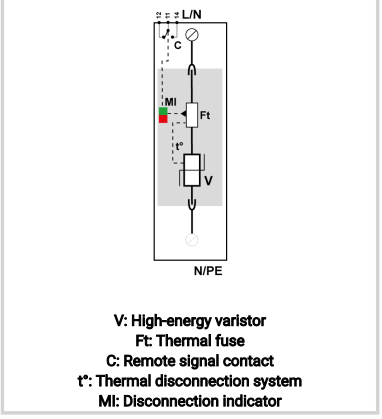

V: High-energy varistor
Ft: Thermal fuse
C: Remote signal contact
t°: Thermal disconnection system
MI: Disconnection indicator

Electrical Characteristics		
Network		230/400V
Nominal line voltage	Un	440 Vac
Max. AC operating voltage	Uc	440 Vac
Temporary Over Voltage (TOV) Characteristics - 5 sec. *Without disconnection*	UT	580 Vac withstand
Temporary Over Voltage (TOV) Characteristics - 120 mn *Without disconnection or with safety disconnection*	UT	770 Vac disconnection
Residual Current *Leakage current to Ground*	Ipe	< 0.5 mA
Follow current	If	None
Nominal discharge current *15 x 8/20 µs impulses*	In	20 kA
Connection mode(s)		L/N or N/PE
Residual voltage at 5 kA *@ 5 kA (8/20µs)*	Up-5kA	1.3 kV
Admissible short-circuit current	Isccr	25 000 A
Mechanical Characteristics		
SPD configuration		Single phase
Format		Plug-in modular box
Failsafe mode		Disconnection from AC network
Disconnection indicator		1 mechanical indicator
Spare module(s)		DSM40-400
Remote signaling of disconnection		Output on changeover contact
Disconnectors		
Thermal disconnector		Internal
Installation ground fault breaker		Type 'S' or delayed
Back-up protection device		Fuses type gG - 50 A
Standards		
Certification		CSA / UL Listed
Environmental standards		EU RoHS
Part number		
332211		