Type 2 AC surge protector - Single-phase

DS42S-480

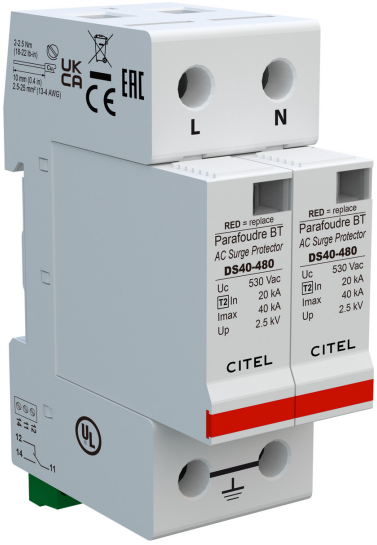

- **Discover our latest innovation : the DAC50S-20-530**
- Type 2 AC Multipolar surge protector
- In: 20 kA
- Imax total: 80 kA
- Pluggable module for each phase
- Remote signaling
- EN 61643-11, IEC 61643-11, UL1449 ed.5

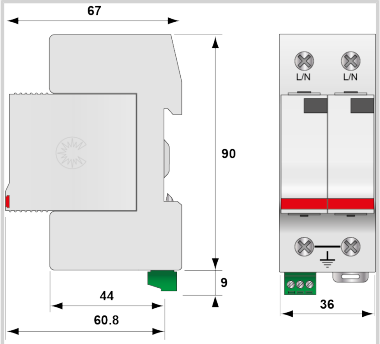

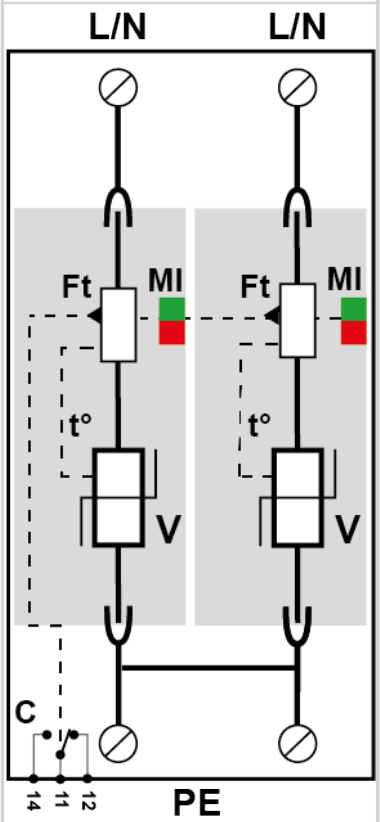

V: High-energy varistor
Ft: Thermal fuse
C: Remote signal contact
t°: Thermal disconnection system
MI: Disconnection indicator

Electrical Characteristics		
Network		230-277 V Single-phase
AC system		TT-TN
Nominal line voltage	Un	230-277 Vac
Max. AC operating voltage	Uc	530 Vac
Temporary Over Voltage (TOV) Characteristics - 5 sec. *Without disconnection*	UT	700 Vac withstand
Temporary Over Voltage (TOV) Characteristics - 120 mn *Without disconnection or with safety disconnection*	UT	920 Vac disconnection
Residual Current *Leakage current to Ground*	Ipe	< 1 mA
Follow current	If	None
Nominal discharge current *15 x 8/20 µs impulses*	In	20 kA
Connection mode(s)		L/PE and N/PE
Protection mode(s)		Common mode
Protection level N/PE *@ In (8/20µs)*	Up N/PE	2.5 kV
Protection level L/PE *@ In (8/20µs)*	Up L/PE	2.5 kV
Admissible short-circuit current	Isccr	25 000 A
Mechanical Characteristics		
IP degree		IP 20
SPD configuration		Single phase
Format		Plug-in modular box
Operating temperature	Tu	-40/+85°C
Failsafe mode		Disconnection from AC network
Disconnection indicator		1 mechanical indicator by pole
Spare module(s)		DSM40-480
Remote signaling of disconnection		Output on changeover contact
Weight		0.222 kg
Disconnectors		
Thermal disconnector		Internal
Installation ground fault breaker		Type 'S' or delayed
Back-up protection device		Fuses type gG - 50 A
Standards		
Certification		UL listed
Environmental standards		EU RoHS
Part number		
461015		