Type 2 AC surge protector - Single-phase

DS42S-400



- **Discover our latest innovation : the DAC50S-20-440**
- Type 2 AC Multipolar surge protector
- In: 20 kA
- Imax total: 80 kA
- Pluggable module for each phase
- Remote signaling
- EN 61643-11, IEC 61643-11, UL1449 ed.5

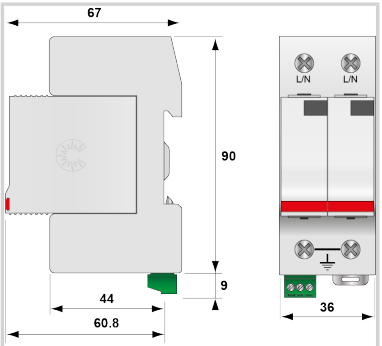

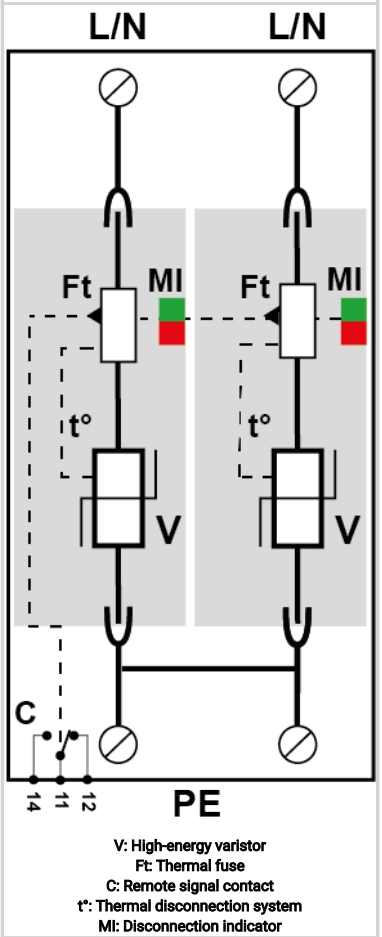

V: High-energy varistor
Ft: Thermal fuse
C: Remote signal contact
t°: Thermal disconnection system
MI: Disconnection indicator

Electrical Characteristics		
Network		230/400V
AC system		TN/TT/IT
Nominal line voltage	Un	400 Vac
Max. AC operating voltage	Uc	440 Vac
Temporary Over Voltage (TOV) Characteristics - 5 sec. *Without disconnection*	UT	580 Vac withstand
Temporary Over Voltage (TOV) Characteristics - 120 mn *Without disconnection or with safety disconnection*	UT	770 Vac disconnection
Residual Current *Leakage current to Ground*	Ipe	< 1 mA
Follow current	If	None
Nominal discharge current *15 x 8/20 µs impulses*	In	20 kA
Connection mode(s)		L/PE and N/PE
Protection mode(s)		Common mode
Residual voltage at 5 kA *@ 5 kA (8/20µs)*	Up-5kA	1.3 kV
Protection level N/PE *@ In (8/20µs)*	Up N/PE	1.8 kV
Protection level L/PE *@ In (8/20µs)*	Up L/PE	1.8 kV
Admissible short-circuit current	Isccr	25 000 A
Mechanical Characteristics		
IP degree		IP 20
SPD configuration		Single phase
Format		Plug-in modular box
Operating temperature	Tu	-40/+85°C
Failsafe mode		Disconnection from AC network
Disconnection indicator		1 mechanical indicator by pole
Spare module(s)		DSM40-400
Remote signaling of disconnection		Output on changeover contact
Disconnectors		
Thermal disconnector		Internal
Installation ground fault breaker		Type 'S' or delayed
Back-up protection device		Fuses type gG - 50 A
Standards		
Certification		UL / CSA / TUV Süd
Environmental standards		EU RoHS
Part number		
461421		