Compact Type 2+3 hard wired surge protector

MSB10-31-230

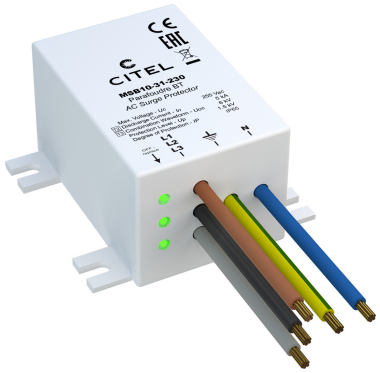

- Compact type 2 (or 3) surge protector
- Wall mounting and hard wired connection
- Status indicators
- IP65

CE

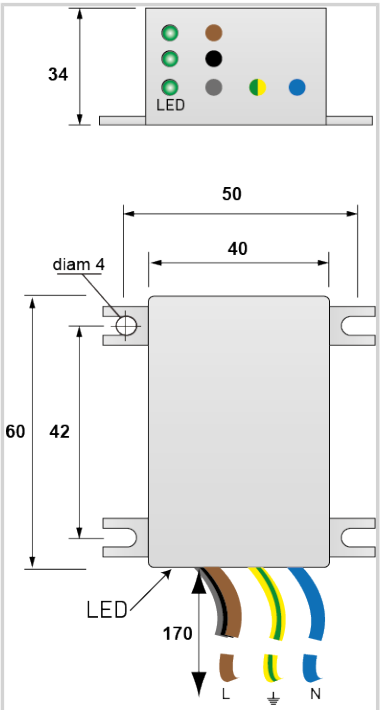

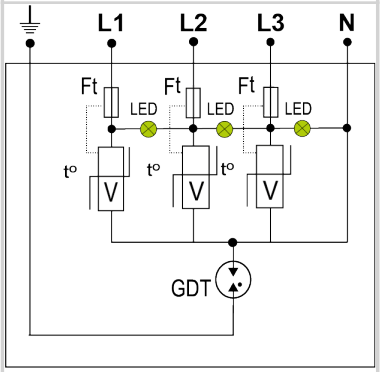

V: Varistor
GSG: Specific gas tube
LED: Disconnection indicator
Ft: Thermal fuse
t°: Thermal system disconnection

Electrical Characteristics		
SPD type	IEC	2+3
Network		230/400V
AC system		TT-TN
Nominal line voltage	Un	230/400 Vac
Max. AC operating voltage	Uc	255 Vac
Temporary Over Voltage (TOV) Characteristics - 5 sec. *Without disconnection*	UT	335 Vac withstand
Temporary Over Voltage (TOV) Characteristics - 120 mn *Without disconnection or with safety disconnection*	UT	440 Vac disconnection
Follow current	If	None
Nominal discharge current *15 x 8/20 µs impulses*	In	5 kA
Max. discharge current *max. withstand @ 8/20 µs by pole*	Imax	10 kA
Withstand on Combination waveform IEC 61643-11 *Class III test: 1.2/50µs - 8/20µs*	Uoc	6 kV
Withstand on overvoltages IEEE C62.41.1		10 kV / 10 kA
Protection mode(s)		Common/Differential mode
Protection level L/N *@ In (8/20µs)*	Up L/N	1.5 kV
Protection level L/PE *@ In (8/20µs)*	Up L/PE	1.5 kV
Admissible short-circuit current	Isccr	10 000 A
Mechanical Characteristics		
Technology		MOV+GDT
Connection to Network		Connecting wire, 2 mm²
Mounting		Wall or plate
Housing material		Thermoplastic UL94 V-0
Operating temperature	Tu	-40/+85°C
Protection rating		IP65
Failsafe mode		Disconnection from AC network
Disconnection indicator		3-Green LED OFF
Operating indicator		3-Green Led ON
Dimensions		See diagram
Weight		0.105 kg
Disconnectors		
Thermal disconnector		Internal
Installation ground fault breaker		Type 'S' or delayed
Standards		
Standards compliance		IEC 61643-11 / EN 61643-11 / UL1449 ed.5
Certification		
Part number		
561223		