Surge protector for LED lighting system Class 1

DLPM1-230L/15K

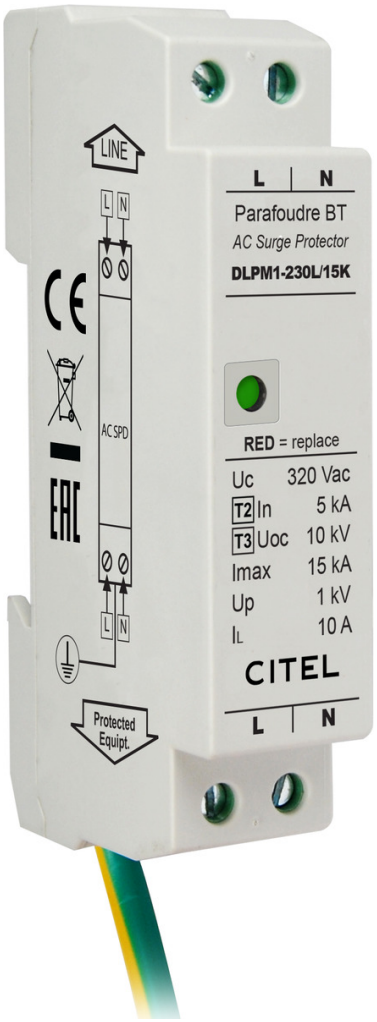

- Type 2 (or 3) surge protectors for LED
- For single-phase or biphase network
- Very compact (low profile)
- DIN rail mounting
- Screw terminal connection
- Mechanical status indicator
- Disconnection AC end of life
- EN 61643-11 compliance

Electrical Characteristics		
SPD type	IEC	2+3
Network		220-240 V Single-phase
AC system		TT-TN
Nominal line voltage	Un	230-277 Vac
Max. AC operating voltage	Uc	320 Vac
Max. load current @25°C	IL	10 A
Temporary Over Voltage (TOV) Characteristics - 5 sec. *Without disconnection*	UT	335 Vac withstand
Temporary Over Voltage (TOV) Characteristics - 120 mn *Without disconnection or with safety disconnection*	UT	440 Vac disconnection
Temporary Over Voltage N/PE (TOV HT) *Without disconnection or with safety disconnection*	UT	1200 V/300A/200 ms disconnection
Residual Current *Leakage current to Ground*	Ipe	None
Nominal discharge current *15 x 8/20 µs impulses*	In	5 kA
Max. discharge current *max. withstand @ 8/20 µs by pole*	Imax	15 kA
Total Maximum discharge current *max. total withstand @ 8/20 µs*	Imax Total	20 kA
Withstand on Combination waveform IEC 61643-11 *Class III test: 1.2/50µs - 8/20µs*	Uoc	10 kV / 5 kA
Withstand on overvoltages IEEE C62.41.1		10 kV / 10 kA
Protection mode(s)		Common/Differential mode
Protection level *@ In (8/20 µs)*	Up L/L	1 kV
Protection level *@ In (8/20 µs)*	Up L/PE	1.5 kV
Admissible short-circuit current	Isccr	10 000 A
Mechanical Characteristics		
Technology		MOV+GDT
Connection to Network		Screw terminal 2.5 mm² max. Earthing conductor 2 mm² - length 60 cm
Mounting		Symmetrical rail 35 mm (EN 60715)
Housing material		Thermoplastic UL94 V-0

Surge protector for LED lighting system Class 1

DLPM1-230L/15K

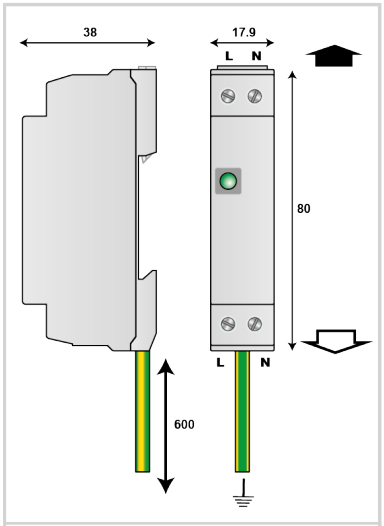

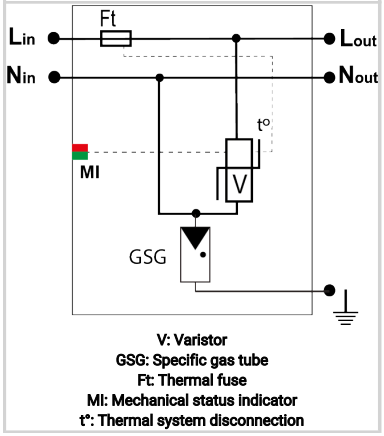

V: Varistor
GSG: Specific gas tube
Ft: Thermal fuse
MI: Mechanical status indicator
t°: Thermal system disconnection

Operating temperature	Tu	-40/+85°C
Protection rating		IP20
Failsafe mode		Disconnection from AC network
Disconnection indicator		1 mechanical indicator
Operating indicator		Green Indicator
Remote signaling of disconnection		No
Dimensions		See diagram
Weight		0.073 kg
Disconnectors		
Thermal disconnector		Internal
Installation ground fault breaker		Type 'S' or delayed
Standards		
Standards compliance		EN 61643-11 / IEC 61643-11
Part number		
355973		