Type 2 AC surge protector + RFI filtering

DS41HFS-120



- Type 2 AC surge protector
- RFI filtering integrated
- In : 20 kA
- Imax : 40 kA
- Pluggable module
- Remote signaling option
- EN 61643-11, IEC 61643-11, UL1449 ed.5 compliance

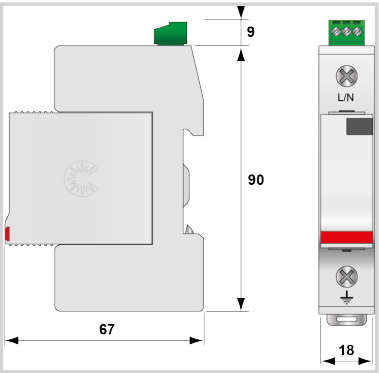

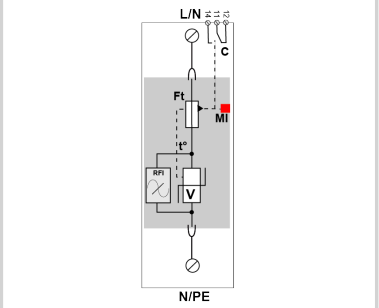

V: MOV
Ft: Thermal fuse
C: Remote signaling contact
t°: Thermal disconnection system
RFI : RFI filtering

Electrical Characteristics		
SPD type	IEC	2
Network		120/208 V
Nominal line voltage	Un	120 Vac
Max. AC operating voltage	Uc	150 Vac
Temporary Over Voltage (TOV) Characteristics - 5 sec. *Without disconnection*	UT	180 Vac withstand
Temporary Over Voltage (TOV) Characteristics - 120 mn *Without disconnection or with safety disconnection*	UT	230 Vac disconnection
Follow current	If	None
Nominal discharge current *15 x 8/20 µs impulses*	In	20 kA
Max. discharge current *max. withstand @ 8/20 µs by pole*	Imax	40 kA
RFI Filtering		0.1 - 30 MHz
Connection mode(s)		L/N or N/PE
Protection mode(s)		Common Mode or Differential Mode
Protection level *@ In (8/20µs)*	Up	0.9 kV
Residual voltage at 5 kA *@ 5 kA (8/20µs)*	Up-5kA	0.6 kV
Max. capacitance	C	0,22 µF
Admissible short-circuit current	Isccr	25 000 A
Mechanical Characteristics		
Technology		MOV+Filter
SPD configuration		Single phase
Connection to Network		By screw terminals: 2.5-25mm²
Format		Plug-in modular box
Mounting		Symmetrical rail 35 mm (EN 60715)
Housing material		Thermoplastic UL94 V-0
Operating temperature	Tu	-40/+85°C
Protection rating		IP20
Failsafe mode		Disconnection from AC network
Disconnection indicator		1 mechanical indicator
Spare module(s)		DSM40HF-120
Remote signaling of disconnection		Output on changeover contact
Dimensions		See diagram
Weight		0.103 kg
Disconnectors		
Thermal disconnector		Internal
Installation ground fault breaker		Type 'S' or delayed
Back-up protection device		Fuses type gG - 50 A
Standards		
Standards compliance		IEC 61643-11 / EN 61643-11 / UL1449 ed.5
Certification		CSA
Part number		

Type 2 AC surge protector + RFI filtering

DS41HFS-120

461690